Engineering Release Notice (ERN)	Location	Change Description	A = Added D = Deleted	W = Was	Document Release Status **RELEASED**	
					Date	Modification Count

The copying, distribution and utilization of this document as well as the communication of its contents to others without expressed authorization is prohibited. Offenders will be held liable for payment of damages. All rights reserved in the event of the grant of a patent, utility model or ornamental design registration.

Document Title
WIRING DIAGRAM
P3151 HDE13
ENGINE

Document Type
PRODUCT SCHEMATIC

Owner Domain:Document Prefix

VOLVO

Group Trucks Technology

Document No	Issue Index	Volume No	Page No
22068055	**09**	**01**	**1(6)**

EDM-W 2000-04-01

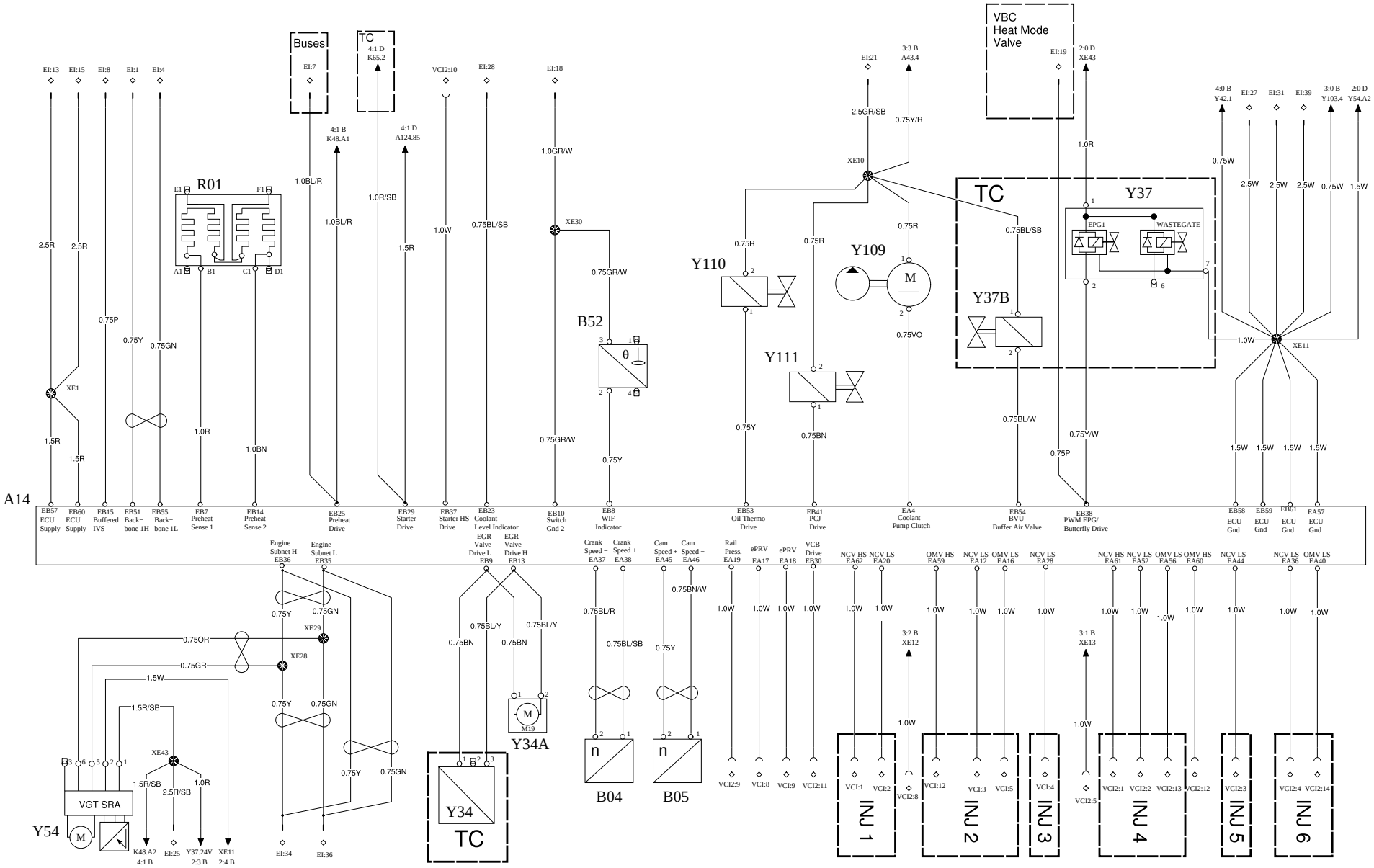

VOLVO	Group Trucks Technology	Document title WIRING DIAGRAM Document type PRODUCT SCHEMATIC	Document No 22068055	Issue 09	Volume 01	Page 2(6)

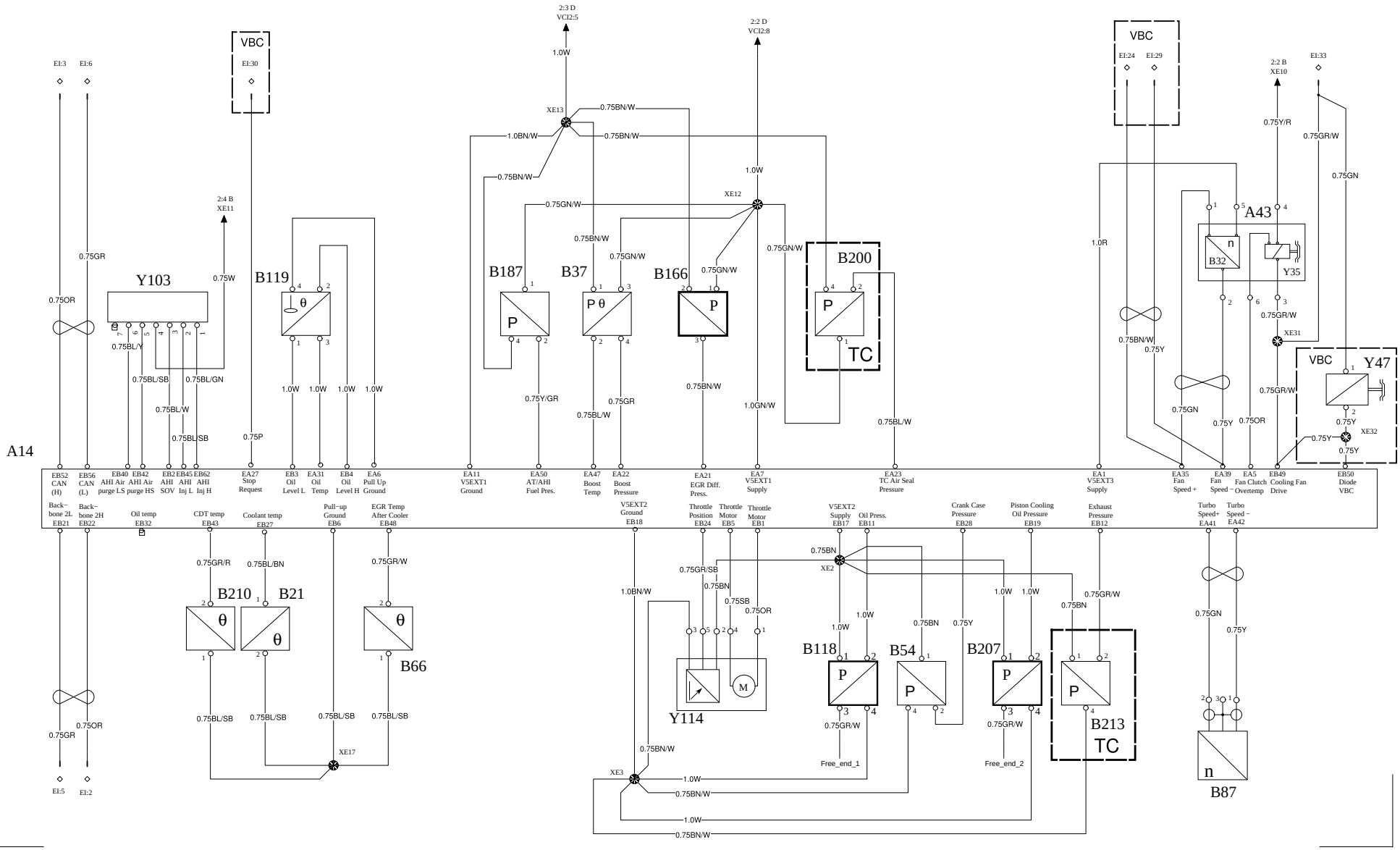

VOLVO Group Trucks Technology	Document title: WIRING DIAGRAM Document type: PRODUCT SCHEMATIC	Document No: 22068055	Issue: 09	Volume: 01	Page: 3(6)

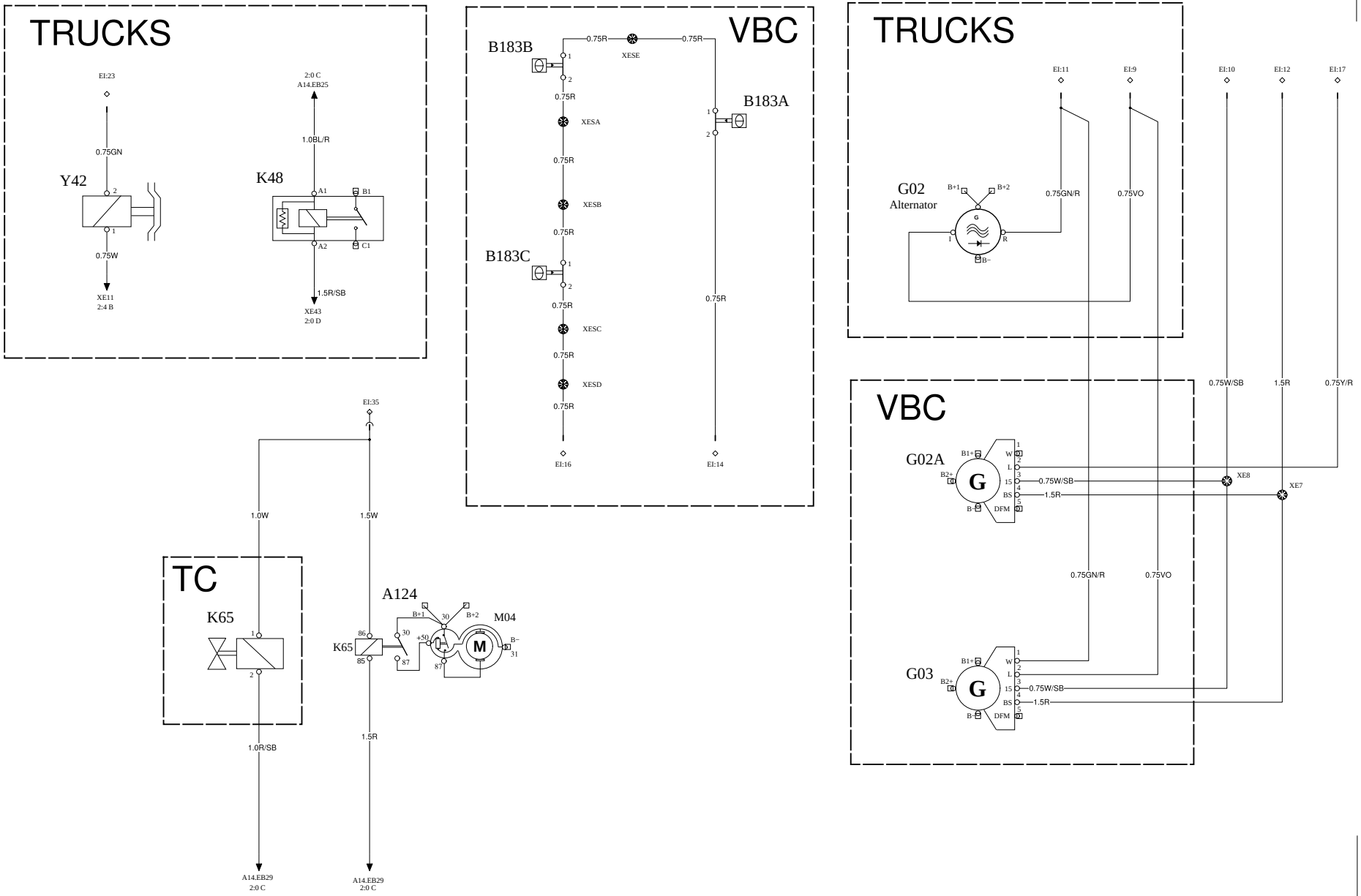

VOLVO Group Trucks Technology	Document title: WIRING DIAGRAM Document type: PRODUCT SCHEMATIC	Document No: 22068055	Issue: 09	Volume: 01	Page: 4(6)

Symbol	Description
A14	Control unit, EMS (Engine Management System)
A43	Electronic fan control (includes B32 & Y35)
A124	Component group starter motor (includes M04 & K65)
B04	Sensor, engine speed, crankshaft
B05	Sensor, engine speed, camshaft
B21	Sensor, coolant temperature, engine
B32	Sensor, engine cooling fan speed (included in A43)
B37	Sensor, boost temperature & pressure
B52	Sensor, water level in fuel pre filter
B54	Sensor, pressure, crank case
B118	Sensor, oil pressure
B119	Sensor, oil level/temp
B183	Fire Sensors A,B and C (VBC)
B187	Sensor, AHI fuel pressure
B166	Sensor, EGR differential pressure
B200	Sensor, Air seal pressure (TC only)
B207	Sensor, oil cooling jet pressure
B210	Sensor, CDT temperature (VGT only)
B213	Butterfly valve back pressure (TC only)
B66	Sensor, EGR Temp. after cooler
B87	Turbo speed (VGT only)
G02	Alternator (TRUCKS)
G02A	Alternator (VBC only)
G03	Alternator (VBC only)
K48	Relay, pre heater
K65	Starter motor relay (included in A124)
M04	Starter motor (included in A124)
R01	Heater, engine preheat
VCI-1	Injector pass through connector #1
VCI-2	Injector pass through connector #2
Y34	Actuator, EGR system (TC)
Y34A	Actuator, EGR system (VGT)
Y35	Solenoid valve, engine cooling fan (included in A43)
Y37	AVU EPG/Wastegate Drive (TC only)
Y37B	AVU2 (TC only)
Y42	Clutch, magnetic, air conditioning compressor
Y47	Fan drive solenoid, (VBC)
Y54	VGT SRA
Y103	Safety valve, fuel system, AHI
Y109	Coolant pump clutch
Y110	Solenoid valve, oil thermostat drive
Y111	Piston cooling jet drive
Y114	Throttle drive/position

EI CONNECTOR	
1	Backbone 1 HS
2	Backbone 2 HS
3	Powertrain Can HS
4	Backbone 1 LS
5	Backbone 2 LS
6	Powertrain Can LS
7	Preheat relay drive (VBC Prevost)
8	Buffered IVS
9	Alternator (TRUCKS)
10	Alternator (VBC)
11	Alternator (TRUCKS)
12	Alternator (VBC)
13	ECU supply
14	Fire sensor loop (VBC)
15	ECU supply
16	Fire sensor loop (VBC)
17	Alternator (VBC)
18	Coolant level ground
19	
20	
21	Component Supply
22	
23	AC comp (TRUCKS)
24	Fan speed HS (VBC)
25	Component Supply
26	
27	ECU ground
28	Coolant level
29	Fan Speed LS (VBC)
30	Stop request (VBC)
31	ECU ground
32	
33	Cooling fan drive (NOT VBC)
34	Engine Sub Can HS
35	Starter relay drive
36	Engine Sub Can LS
37	
38	
39	ECU ground